Formulate Fabric Display iPad Holder
Assembly Instructions

www.xldisplays.co.uk
01733 511 030

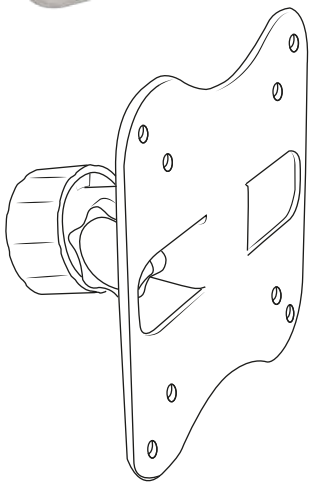

1

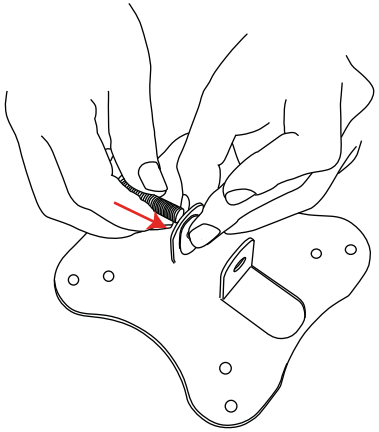

2

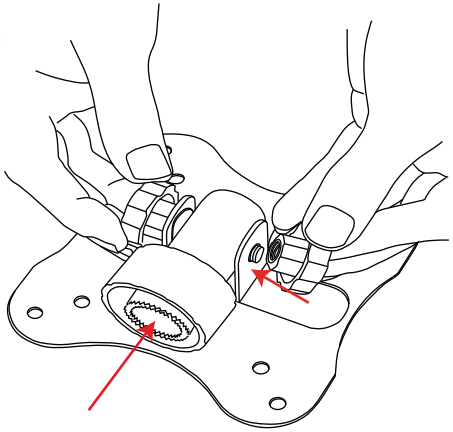

3

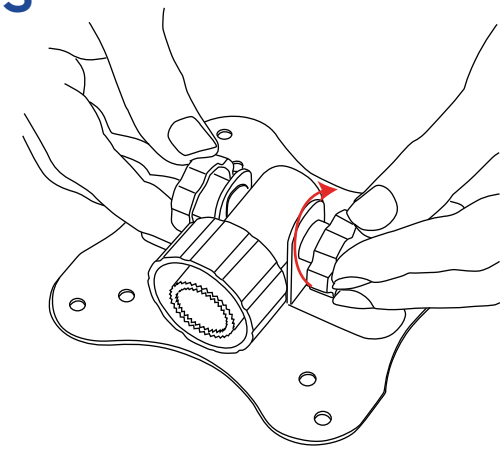
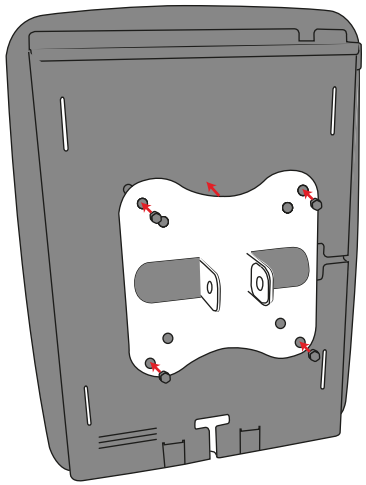
4