Dragonfly 2
Installation

www.xldisplays.co.uk
01733 511 030

1

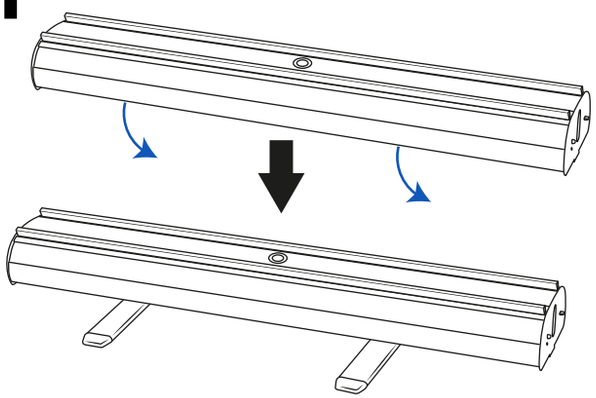

2

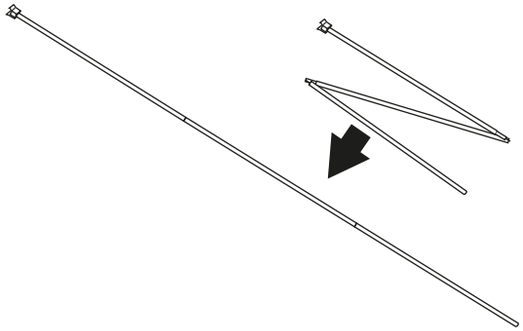

3

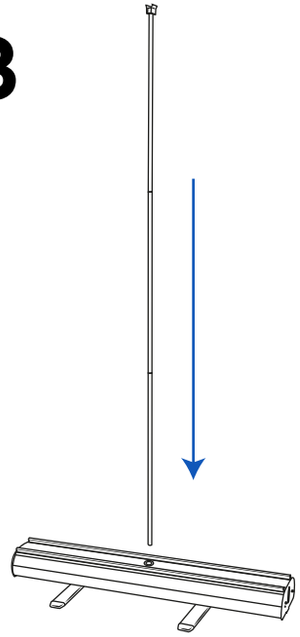

4

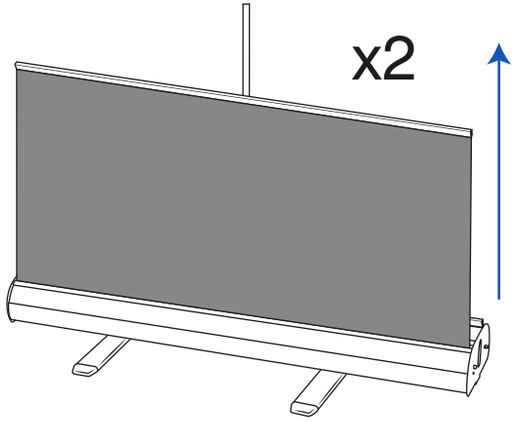

5

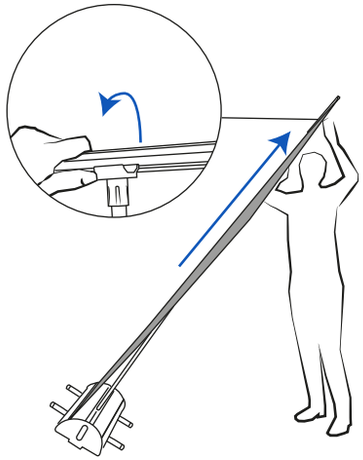
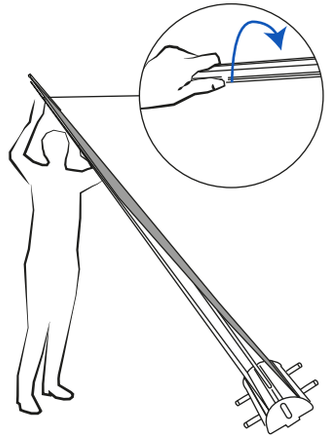
6