Cafe Barrier System Deluxe

www.xldisplays.co.uk
01733 511030

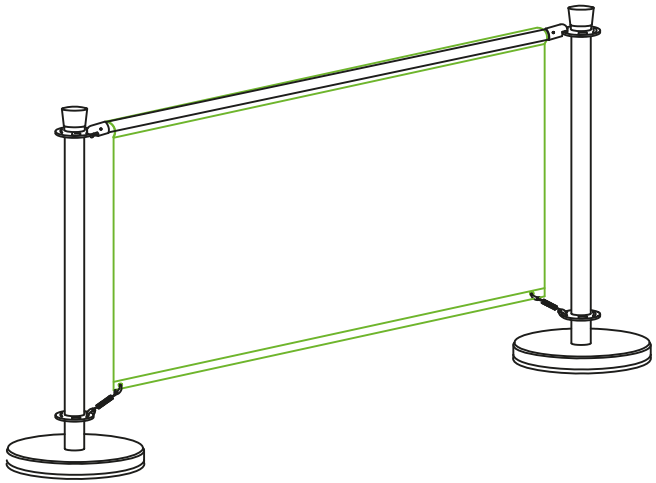

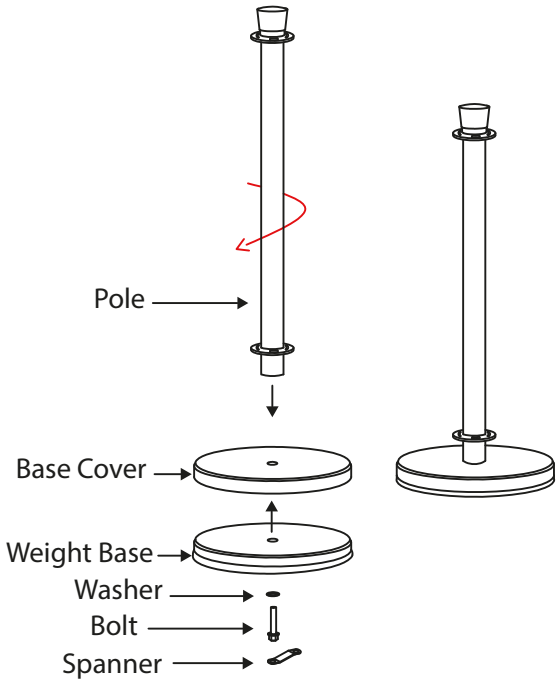

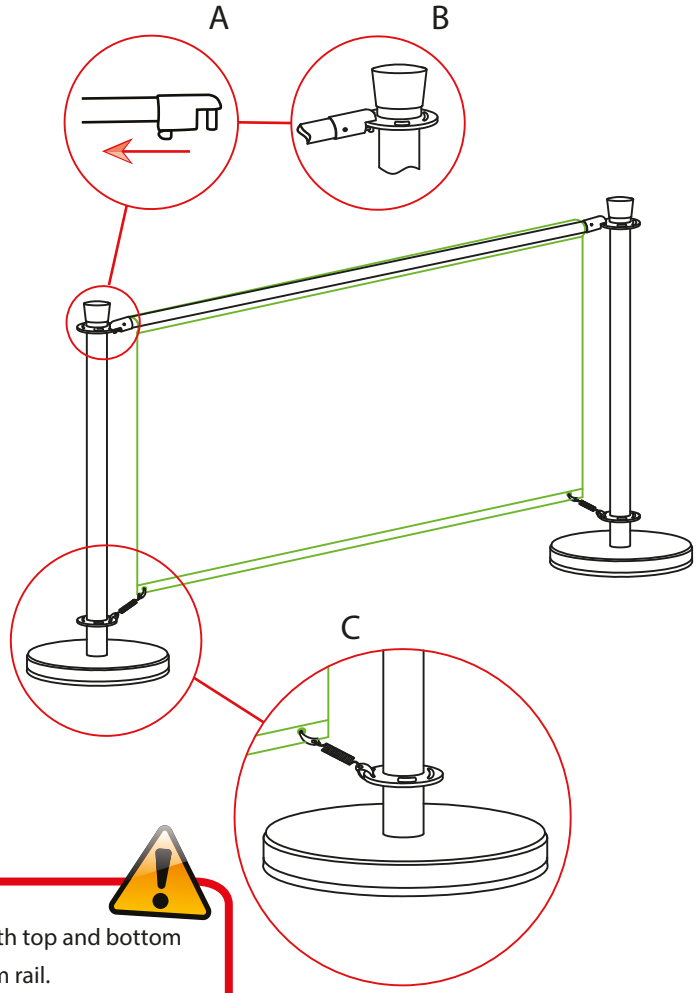

kg

Post - 1.65kg
Base - 6.10kg
1000mm wide Rail - 1.10kg
1500mm wide Rail - 1.4kg
2000mm wide Rail - 1.6kg

When using graphic rails on both top and bottom repeat steps A&B for the bottom rail.